OPERATION MANUAL

TRANSPORT, STORAGE, INSTALLATION, COMMISSIONING, AND MAINTENANCE OF HERMETICALLY SEALED DISTRIBUTION TRANSFORMERS.

The Buyer shall be obligated to acquaint themselves duly with this manual and to follow its instructions. In the event of non-compliance with the instructions laid out here, the Buyer's right to claim defects in the warranty period shall cease to exist.

1. General Guidelines

Hermetically sealed transformers do not have a conservator or dilatation container. The transformer is hermetically sealed from the outer environment, it has no air layer to compensate the volume changes of the cooling and, simultaneously, insulating liquid, hereinafter referred to as 'oil' (mostly mineral, sometimes synthetic). The ribbed tank is designed in such a way so that the cooling ribs, by their deformation, absorb the volume changes of the oil during operation caused by a change in its temperature.

The standard design of the transformer has not oil-level indicator, since due to the hermetical sealing, oil filling and control is not necessary.

Filling of oil is carried out at the production site in such a way that no overpressure or under-pressure is produced at the prescribed mean oil temperature. The mean oil temperature is calculated during transformer design depending on the minimum and maximum operation oil temperature and the expansion of the copper or aluminium windings. It is therefore necessary to prevent the opening of the filling tube cap as well as the breathability of the bushing after the delivery of the transformer. In all the works, such as retrofitting a pressure relief valve or another control device, replacing seals or bushings that require the tank to be opened and aerated, the instructions in paragraph 6 'Repair Work' must be followed during oil drain or new oil filling. An exception shall consist of additional installation of a thermometer into a sealed thermometer pocket. There is no risk of the seal being breached here.

Oil safety and product data sheets can be sent on request according to serial number of the transformer.

2. Transport

Road transport shall be principally carried out using vehicles with air suspension.
The vehicles have to be in perfect condition and have to meet the conditions for road transport. The trucks have to be equipped with suitable anchorages, otherwise transport from the Elpro – Energo Transformers company will not be permitted. The car have to have at least 4 straps per one transformer. The transformer cannot be transhipped during transport. Different means of transport and transport conditions have to be discussed with Elpro – Energo Transformers.

Foil packaging due to dust and humidity is not required for oil transformers. The transformers are transported assembled without installed wheels, filled with insulating liquid.

Lifting and transporting with a forklift truck is possible, but only at your own risk! However, pay attention to the paint on the tank and transport it carefully. There is nothing on the tank to prevent the transformer from falling over!

Unloading by crane:

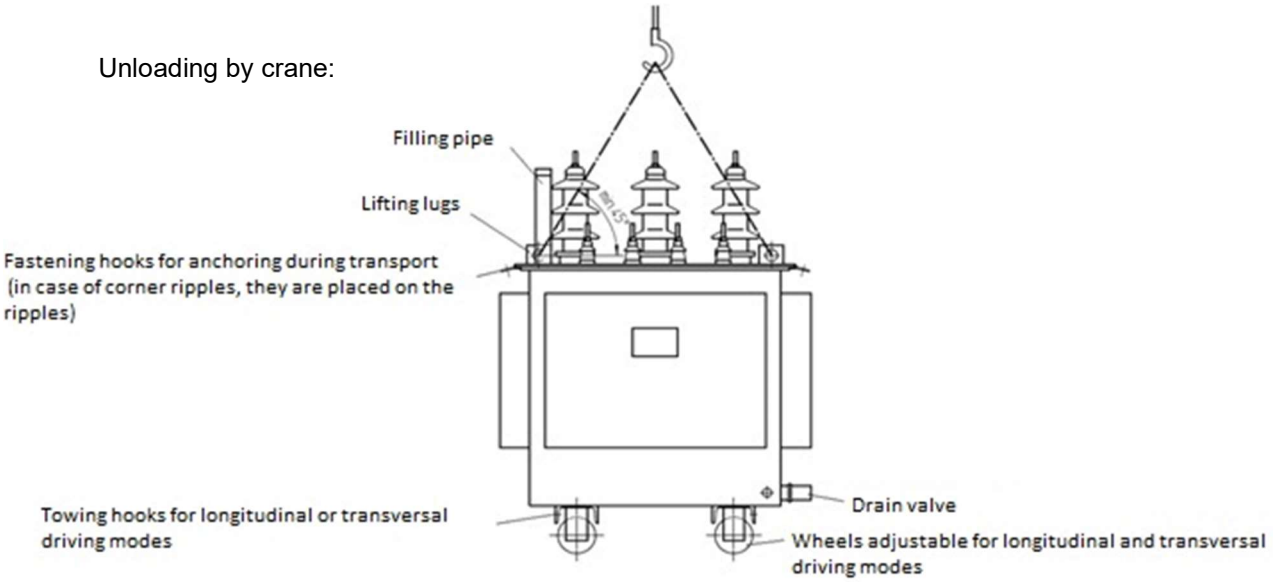

The transformer have to be stored and protected against the inertial forces that arise during transport. When driving, the transformer is subjected to various stresses; longitudinally to the direction of travel (acceleration and braking forces), transversally (centrifugal forces in turns), and vertically (forces when driving on uneven surfaces).

The transformer shall be fastened using 4 pieces of straps (carrier accessories) to 4 fastening hooks on the corners of the tank at an angle of approximately 30° to the 4 fastening hooks on the vehicle. (See figures below.)

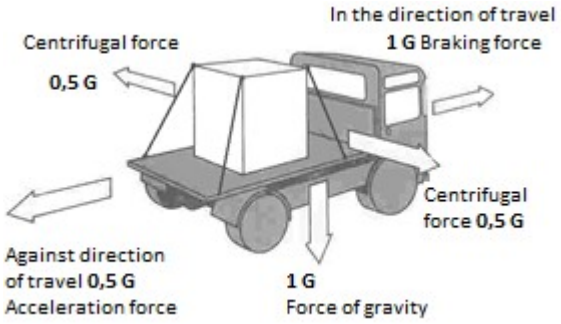

Observe the following max. load = acceleration forces:

In the direction of travel = 1 x G
(max. braking force during braking)

Against direction of travel = 0.5 x G
(max. acceleration during start-up)

Laterally to the direction of travel = 0.5 x G
(max. centrifugal forces when turning)

G = force of gravity of the load

Fixing on the vehicle:

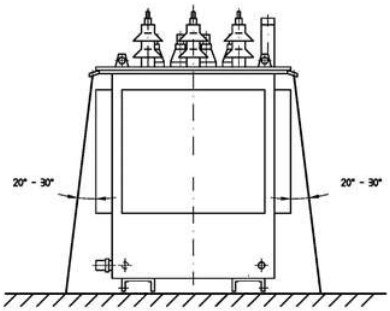



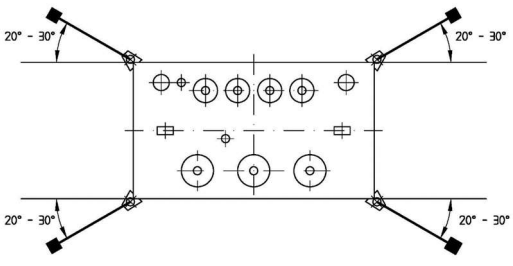

Check the transformer immediately after unloading!
Damage caused during transport and detected immediately upon delivery must be immediately reported to the forwarder responsible for transport, and the finding must be recorded in the transport document. Additional proof of damage during transport is often a big problem.
Detected paint damage must be repaired immediately.
The transformer have to be lifted only using the lifting lugs on the cover.
The fastening hooks on the tank or on the edge of the cover serve only to secure it during transport!

3. Storage

If the transformer is not installed and commissioned immediately upon delivery, it must be stored in a protected place (enclosed and secured place) and protected against contamination. The transformer must be placed in a horizontal position. There are no other storage requirements, since these are oil transformers, and these are intended for both indoor and outdoor use.

If the transformer is stored for more than a year, it is recommended to re-measure the insulation conditions prior to commissioning and to check if there is no oil leakage of the tank.

Important: The storage temperature must not fall below -25°C.

4. Installation and Commissioning

4.1. Transformer Installation

The operator shall be responsible for adequate protection from the parts under electric current or voltage.
The transformer wheels shall be secured against movement.
The transformer shall be earthed on the earthing screw.
MV and LV – connectors:
The contact surfaces intended for connection to MV and LV bushings must be metallic clean and the following tightening torques must be observed during their connection (without lubricants):

Bolts:	M 12:	15.5 Nm
	M 20:	52.0 Nm
Connection flag with a screw:	M 10:	40.0 Nm
	M 12:	70.0 Nm
	M 16:	110.0 Nm

For connection flag, the tightening torque for fastening to the bushing bolt shall be checked before and after the connection.

In the case of the ‘Plug-in connector on MV side proceed as follows: remove the cover lid, verify the cleanliness of the contact surfaces, insert the connector into the connector bushing and fasten it.

Cables or bus bars connect to the bushings by the customer must be fixed in such a way not to cause mechanical stress on the bushings.

The maximum installation height is up to 1,000 m above sea level, and during operation, the ambient temperature must not exceed +40°C (unless ordered otherwise).

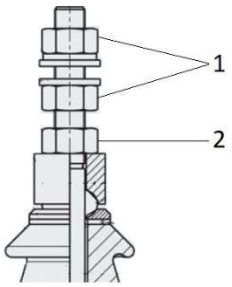

Nut 1 serves to attach the cable eye.
Nut 2 serves to tighten the bushing.
Nut 1 and nut 2 must not touch on the bushing, in case of contact of these nuts, there may be leakage of the bushing.

4.2. Change of tap

For transformers with multiple taps, the required tap shall be set according to the rating plate.

- The tap can be changed only when transformer is not connected to the grid.

The procedure for changing the tap position is as follows:

1. Flip the locking cap to the side.
2. Rotate the dial hand without lifting it above to the required tap. The correct position of the tap is determined by two arrows opposite from each other.
3. Fold the locking cap into the cut-out in the dial hand.



- The on-load tap-changer must be operated exclusively in accordance with the instructions given in the tap-changer manufacturer's manual.

4.3. Other Guidelines

The monitoring devices, if included in the delivery, shall be connected and tested.

For parallel operation of transformers please check standard IEC 60076-8.

Values for setting up the integrated protective device R.I.S. / DGPT2 / DMCR 3.0 (if used):

T1: 100°C (trip)
T2: 80°C (alarm)
P: 0.2 Bar

Values for setting up the two-contact thermometer (if used):

80°C (alarm)
100°C (trip)

The procedure for commissioning the pressure relief valve (if used):

The pressure relief valve is adjusted and ready for use directly from production – do not take any further action!

ATTENTION: If the MV protection tripped the transformer (either when switching on or during operation the transformer) and it is not possible to determine the exact cause, **do not switch the transformer on again!!!** There is a risk of extensive damage to the transformer, the occurrence of fire or even fatal injury.

5. Maintenance Work

Service intervals:

Prior to switching on:	After transport and handling by crane, check for mechanical damage (especially the cooling ribs and bushings), check for oil leakage.
Once a year:	Check if there is no oil leakage, verify the tightness of the transformer tank, the bushings, the drain valve, the tightening of the screws of the connection flags, including the earthing screw (pay attention to the recommended tightening torques). Ensure thorough cleaning of the bushings, the surface of the tank, and the transformer cover.
Once every five years:	Together with the revision of the transformer station, check earthing connection and perform measurements of electrical parameters and a check the insulation condition: - ratio measurements - measurement of winding resistance - measurement of the insulation state In the case of satisfactory results it is not necessary to take an oil sample for the entire service life of the transformer (approx. 45 years). In the case of poor results of insulation state measurements, ensure oil sample collection and its analysis (see point 6.3).

Thoroughly clean and repaint rusting areas.

6. Repair Work

We recommend that all of the following activities are carried out by a professional company only.

6.1. Oil Draining

If it is necessary to open the transformer during maintenance or repair work proceed as follows:

- When the filling tube is closed, the oil can be drained using the drain valve at the bottom of the tank until the pressure equalises (rest state).
- Open the lid of the filling tube and release the insulating liquid ca. 50 mm below the cover of the tank (check is carried out with a measuring device inserted into the filling tube).

6.2. Oil Filling

After completion of the works, the transformer is filled in the manner described below and hermetically sealed:

- The lid of the filling tube is unscrewed.
- The transformer including the filling tube is filled with oil.
- The bushings are aerated.
- The filling tube is filled up to the rim and closed tightly with a lid or an appropriate monitoring device (e.g., a pressure relief valve) and sealed.
- Information about oil temperature (tolerance of ±3K) and the corresponding quantities of oil to be drained are stated on the rating plate. With such a volume, the transformer then operates in the correct pressure range. The current oil temperature is measured by a thermometer placed in the thermometer pocket on the cover (the thermometer is not standard equipment; it can be ordered separately). Oil draining is done while the filling tube is closed. The oil draining is done by means of a drain valve at the bottom of the tank. The quantity of oil to be drained is shown on the rating plate and is dependent on its temperature.
- Follow the instructions for the protective and monitoring devices used.

6.3. **Oil Testing**

Oil sampling and its testing shall be done according to IEC 60296.
Minimum breakdown values are:

New oil:	≥ 50 kV
Operating oil:	≥ 30 kV

Replacement is required when breakdown values are lower than 30 kV.

It is recommended to entrust oil sampling to a specialist company with a certificate for carrying out oil sampling collection.

7. Accessories and Components of Delivery:

The delivery includes:
- 4 pcs of wheels
- Routine test protocol
- Declaration of conformity (CE)
- Operating manual

Optional accessories:
connection flags
Two-contact thermometer
Pressure relief valve
Integrated protective device R.I.S. / DGPT2 / DMCR 3.0
Pt 100